Installation into wood/steel or concrete
depending on constructional situation

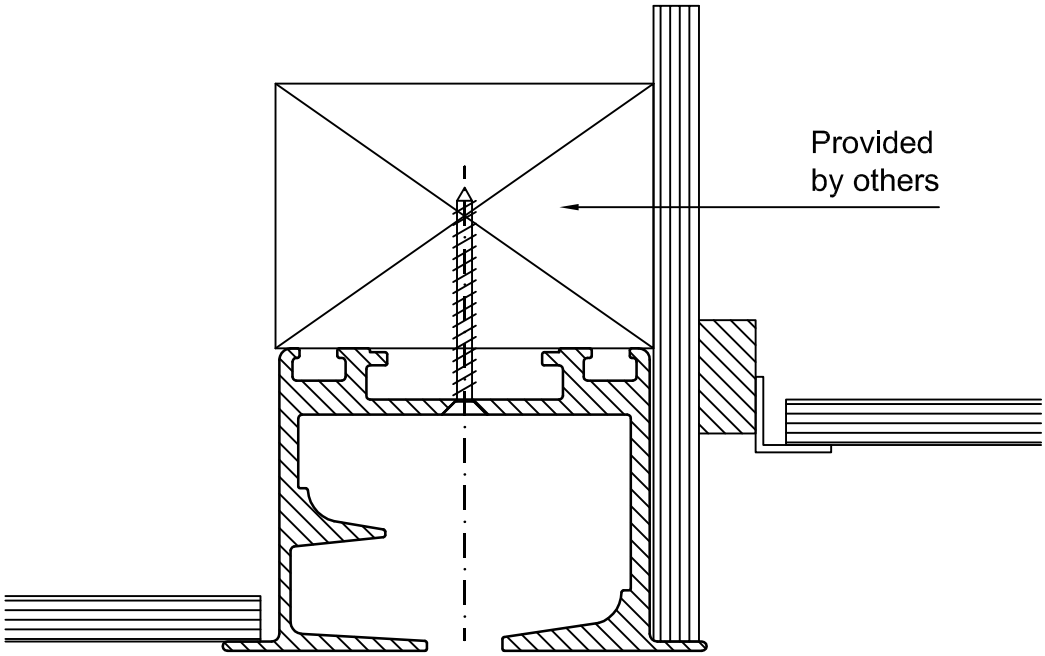

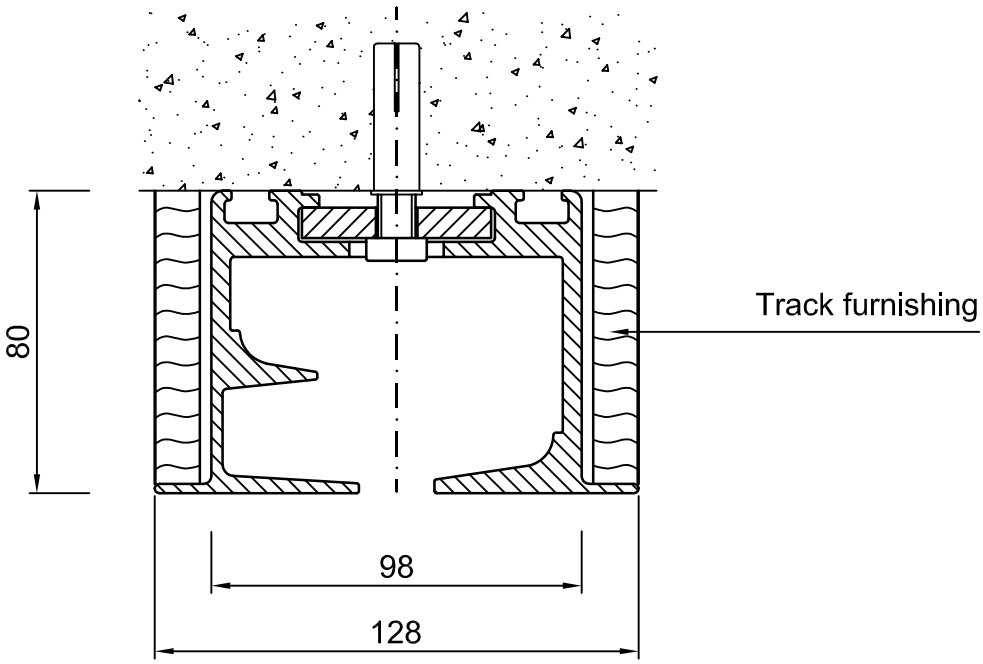

2-Point suspension MR-1 Track (Standard RAL 9010)

	Date	Name
Drawn	14-10-'10	AvdH
Checked		
Scale : 1:2		

Order number :

Customer :

Project :

Drawing number : 15

Sheet : 15 of 19

Projection

A4

Niche Operable Systems Ltd.
Darbyshire House
460 Manchester Road
Bolton, BL3 2NU
T: +44 (0)1204 381 552
F: +44 (0)1204 381 556
E: enquiries@folding-partitions.co.uk
www.folding-partitions.co.uk

Niche Moveable Walls